FEATURES

- **4.8 YEARS, UP TO 9 YEARS ON A SINGLE AA SIZE BATTERY (COIL)**
- **"C" SIZE BATTERY OPTION**
- **UNIVERSAL INPUT, 5 kHz**
- **NO NEED OF AMPLIFIERS OR LINEARIZERS**
- **ISOLATED 4-20mA, 12 BIT ANALOG OUTPUT**
- **7 DIGIT RATE AND THREE 7 DIGIT TOTALS WITH PROGRAMMABLE DECIMAL PLACES**
- **SINGLE KFACTOR OR 10 POINT CALIBRATION CURVE**
- **KFACTORS FROM 0.001 TO 9,999,999**
- **MILLILITERS, LITERS, GALLONS, CUBIC FEET, CUBIC METERS, ACRE FEET**
- **PER SECOND, PER MINUTE, PER HOUR, PER DAY**
- **SEPARATE RATE AND TOTAL UNITS**
- **100V/100mA OPEN DRAIN PULSE OUTPUT FOR UP TO 480 PULSES PER MINUTE (METERING PUMPS)**
- **PROGRAMMABLE SLEEP MODE FOR THE DISPLAY TO SAVE POWER**
- **SETTINGS LOCK/UNLOCK FOR SECURITY**
- **HIGH CONTRAST IN THE ENTIRE TEMPERATURE RANGE**
- **BATTERY LOW INDICATOR**
- **SIMPLE PROGRAMMING, SMALL SIZE**

APPLICATIONS

- **FLOW RATE AND TOTAL MEASUREMENT AND CONTROL**
- **PROGRAMMABLE METERING PUMPS PRECISE CONTROL FOR DOSING APPLICATIONS**

1. DESCRIPTION

GFC106 is a micro power battery powered flow computer / totalizer with an outstanding combination of excellent features, extremely long battery life, universal input, high input frequency, isolated analog output and an open drain pulse output. It accepts open drain/collector npn/pnp, reed switch, dry contact, coils, almost any wave and logical signals.

For better accuracy, GFC106 provides capabilities of using calibration tables for up to 10 points. In seconds the operator can switch between a single KFACTOR and the curve of up to 10 points.

The GFC106 software implements a version of our proprietary predictive/adaptive, self-adjusting digital filtering which provides extremely stable reading at any input frequency, plus very fast response to any change in the flow.

GFC106 is the perfect solution for flow measurement and control applications that require high accuracy and reliability, small size, industrial grade performance and low maintenance.

© 2010 G Instruments – All rights reserved

2. ABSOLUTE MAXIMUM RATINGS *

Operating temperature	-20 ℃ to +70 ℃ **The electronics system is industrial (-40 ℃ to +85 ℃) and higher grade .** **The Liquid Crystal Display (LCD) limits the temperature range.**
Output current	100 mA DC
Output voltage	100 V
Input voltage (“S” to “-”)	5 VDC

<u>* NOTICE: Stresses above those ratings may cause permanent damage to the device.</u>

3. CHARACTERISTICS

Parameter	Conditions	Min	Typ	Max	Units
Power Supply					
Battery life	25 ° C, LCD sleep enabled, coil, typical values, Fig. 1, Note 3	4.8		9	years
Battery life	25 ° C, LCD sleep enabled, 50 uA, typical values, Fig. 2, Note 3	2.5		4.2	years
Input					
Voltage for the sensor	-20 ℃ to +70 ℃	2.8		3.7	V DC
Input threshold, high	Rectangular wave 5 V, 50 % duty cycle		1.75		V
Input threshold, low	Rectangular wave 5 V, 50 % duty cycle		1.25		V
Coil voltage	Symmetrical signal from the coil (sine, triangle, saw etc)	20			mVpp
Input frequency	Rectangular wave, 50 % duty cycle	0 - 5	0 - 10		kHz
Analog Output					
Power supply	-20 ℃ to +70 ℃, Note 1	9.5		36	V DC
Resolution	-20 ℃ to +70 ℃, 9.5 – 36 V		4		uA
Error	250 ohm load, 24 V, 25 ℃, Note 2			0.05	% FS
Power supply error	9.5-36V, no load, output disabled, 25 ℃			0.5	uA/V
Temperature coefficient	-20 ℃ to +70 ℃, 24 V		35		ppm/ ℃
Current, output disabled	SET20 = 0.0, 24 V DC supply, 25 ℃		3.85		mA
Pulse Output					
Output ON resistance	-20 ℃ to +70 ℃, 100 mA			1.5	ohm
Output OFF leakage	-20 ℃ to +70 ℃, 100 V DC			1	uA
Pulse duration			62.5		ms
Pause duration		62.5			ms
Pulse rate				480	p/min

Note 1: The minimum voltage for the 4-20 mA output to operate is V = 9.5 + R load [ohm] * 0.020 [V DC]
For a GFC106 with a load of 250 ohm, the minimum voltage would be 14.5 V DC.
Note 2: The parameter includes all errors, non-linearity and noise at constant voltage and temperature
Note 3: The battery life shown is for a “AA” size battery. GFC106 has a “C” size battery option that can provide even longer battery life for sensors that have higher consumption

© 2010 G Instruments – All rights reserved

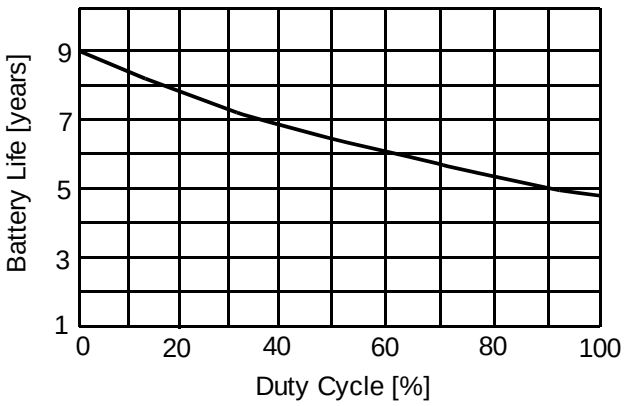

Fig. 1 Battery Life vs. Duty Cycle, coil

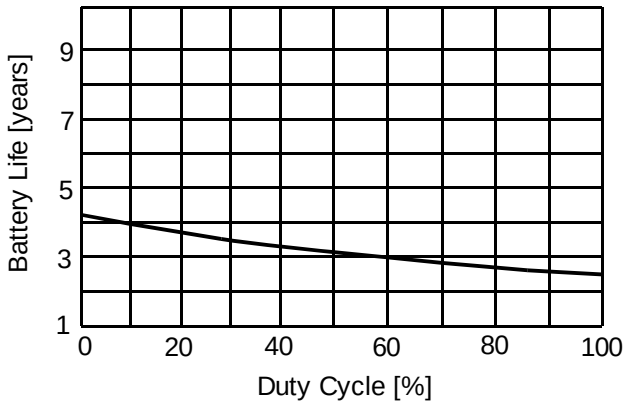

Fig. 2 Battery Life vs. Duty Cycle, 50 uA

NOTE: Duty Cycle refers to the percentage of the time the flow computer / totalizer has input pulses.

Example: If a coil is connected and there is consistent flow the entire 4.8 years, the battery life of the GFC106 will average 4.8 years. For an average flow of 12 hours each day, the battery life averages 6.4 years.

3.1. BUTTONS

There are three buttons: **SET**, **UP** and **RIGHT** :

- **SET** is used to enter and exit menus and confirm options chosen
- **UP** is used to change the data
- **RIGHT** is used to move the cursor (blinking digit or icon) to the right

Additional button functions:

There are two types of buttons accepted by the GFC106 flow computer:

- Short is when the button is pressed and released in less than 0.5 second
- Long is when it is kept pressed for more than 5 seconds
- All other durations are ignored

NOTE: The UP button will not change the value if the settings are locked.

3.2. INPUTS

Pulse input from flow sensors. This input can power micro power sensors. It accepts open drain/collector npn/pnp sensors, reed switches, dry contacts, different types of waves, logical signals and coils. There is no need for external amplifiers or linearizers.

© 2010 G Instruments – All rights reserved

3.3. OUTPUT

GFC106 has one pulse output and one isolated analog output.

3.3.1. Pulse output

The pulse output is 100VDC/100mA DC open drain (sinking) with reverse polarity protection. It can be programmed to control metering pumps or just to scale the input pulses.

Example: You are adding chlorine or fertilizer to the water and have connected the control input of a pump to this pulse output. You program the "**SETP**" factor at 20.000 pulses per gallon. The pump will produce 20 pulses for every gallon passed through the flow meter and add the chlorine or the fertilizer in an exact proportion to the water.

3.3.2. Analog output

The isolated analog output is 4-20 mA, two wire, passive, 12 bit, with reverse polarity and surge protection, high accuracy and reliability. Using the **SET20** menu, it can be programmed to represent the flow rate.

3.4. DISPLAY

The liquid crystal display (LCD) has 7 digits with 1,2 or 3 decimal places and multiple icons.
It shows rate, total and all the variables and options that can be set or programmed. The rate and the totals have programmable auto, none, 1, 2 or 3 decimal places.

A "**FLOW**" icon will always be displayed.

When the display shows rate, a "**RATE**" icon is displayed. If it shows total, a "**TOTAL**" icon will be displayed along with "**A**", "**B**" or "**C**" (GFC106 has three totals).

When input pulses are present, an "I**NP**" (input) icon will be displayed.
If the total on the LCD is allowed to be reset, a "**RESET**" icon will be displayed.

3.4.1. Volume and time units

- GFC106 flow computer has milliliters (**mL**), liters (**L**), gallons (**G**), cubic feet (**CF**), cubic meters (**M^3**) and acre feet (**AF**) . Separate volume units can be programmed for flow rate and total.
- The time units are: second (**S**), minute (**M**), hour (**H**) and day (**D**).

3.4.2. Normal mode

Automatically after replacing the battery or exiting a menu, GFC106 enters the normal mode. Normal mode displays:

- Rate

- Total A, B or C. Total A reset can be enabled or disabled. It is stored in a non-volatile memory every 50 seconds or immediately when cleared.
  If a total is allowed to be reset, the **RESET** icon is shown. Reset a total with long **RIGHT** button.

- To switch between rate and total on the display, use short **UP** button.

© 2010 G Instruments – All rights reserved

3.4.3. Menus

To enter the menus, use long **SET** button in normal mode. About 5 seconds after pressing (and holding pressed) the **SET** button, the first menu will appear on the LCD:

- **V**olume **U**nits **(vU)** for all totals total can be entered in this first menu. To change the units use the **UP** button. While in this menu all the settings can be locked / unlocked. Use long **SET** to enter the lock menu.

    - Use short **UP** to lock / unlock the settings. Then use short **SET** to go back to the total volume units menu.
      If the settings are locked, they can be viewed, but not changed.

- Press short **SET** to move to the "Total **d**ecimal **P**laces" menu where (using short **UP)** auto, none, 1, 2, or 3 decimal places for all totals can be programmed.

- Press short **SET** to move to the **Total A Reset enable / disable** menu. In this menu using **UP** button the total A reset can be enabled or disabled.
  If enabled and GFC106 is in normal mode displaying total A, the RESET icon will also be displayed and long RIGHT will clear total A. Press short **SET** to move to the KFACTOR decimal places menu.

- **KFACTOR** icon along with **dP 1234** is shown. The decimal places for all KFACTORs (single KFACTOR and all KFACTORs in the calibration table) can be programmed using **UP** button. Use short **SET** to move to the next menu.

- **KFACTOR** icon is shown. The main **KFACTOR** for the particular flow meter connected to the GFC106 can be entered using **UP** and **RIGHT**. This is how many pulses the flow computer will receive for one total volume unit. While in this menu a calibration table of up to 10 points can be entered

    - Enter the calibration data mode by using long **SET.**
    - "**CAL Crv**" will appear on the LCD, and "**NO**" icon will be blinking. To continue choose **YES** and press short **SET**. To leave calibration curve data mode and leave the previous calibration data untouched, choose **NO** and press short **SET** to go back to the **KFACTOR** menu.

      This feature is very useful for flow meters that have a calibration sheet provided by the manufacturer or the calibration laboratory. Each point consists of an input frequency and a KFACTOR (in pulses per total volume unit) for that frequency.

      Once you enter the calibration curve data menu, you have to go to the last point (point 9). If you have data for less points enter 0.0 for the frequency for all unused points. The GFC106 will not accept 0.0 for any KFACTOR.

      If **YES** has been chosen, "**Point 0**" will appear on the LCD. Press short **SET** and enter the input frequency in Hz for point 0. Press short **SET** and then enter the KFACTOR for that input frequency. Press short **SET** to do the same for the next point.

      Repeat the above for up to 9 more points. After point 9, the flow computer will automatically return to the **KFACTOR** menu.

      There is no need to enter the frequency at each point in a special (ascending/descending) order. The computer will automatically sort and validate the data and calculate all the parameters.

© 2010 G Instruments – All rights reserved

From the **KFACTOR** menu use short **SET** to enter the next menu. NOTE: the computer will not accept zero for the **KFACTOR**.

- In the **CUrvE** menu, use short **UP** to change between blinking **CUrvE** and blinking **KFACTOR**. The flow computer will use either the single **KFACTOR** or the calibration **CUrvE** of up to 10 points for calculations. The points have to be entered before using the calibration curve. The factory default is 1.0 for the KFACTOR of each point. The curve is stored in a non-volatile memory.

- In the **CUrvE** menu press short **SET** to move to **flow rate volume unit** menu. Then use **UP** to choose the new unit among **mL**, **L**, **G**, **CF**, **M^3** and **AF.**

- Press short **SET** to move to the **flow rate decimal places** menu and then use **UP** to choose among auto, none, 1, 2 and 3 decimal places. Press short **SET** to move to the **time unit** menu

- In the "time unit" (**tU**) menu, use **UP** to choose the time units among **S**, **M**, **H** and **D**. Press short **SET** to move to the **SET20** menu.

- In the **SET20** menu, set the flow rate at which you want the analog output to be 20.00 mA. Analog output will be 4.00 mA at 0.0 . If **SET20** = 0.0 the analog output will stay about 3.85 mA and will not change with the flow rate. Press short **SET** to move to the **SETP** menu.

- The value for **SETP** must be in **pulses per total volume unit**

- Press short **SET** to move to the **SLEEP** menu.
  In the **SLEEP** menu, (using **UP** button) the sleep of the LCD feature can be enabled or disabled.
  If this feature is enabled the GFC106 computer will turn off the LCD after not having any input pulse or button pressed for one minute, extending the battery life.

  NOTE: Only the LCD is powered down during sleep. The computer is fully functioning and no input pulse or button press will be missed. The computer will turn the LCD on immediately after the first input pulse or button pressed.

  If this feature is disabled, the LCD is always powered but the total consumption of the GFC106 computer will be higher and the battery life will be reduced.

  Because the **SLEEP** menu is the last one, pressing long **SET** will move the computer to the **LOCK** menu. Use **UP** to lock the settings and press short **SET** to go back to **SLEEP** menu. General practice would be to unlock the settings at the **total volume unit (the first)** menu. Settings can be changed and locked again before exiting at the last menu (**SLEEP** menu). Press short **SET** to exit. After a couple of seconds during which all the setting are checked, validated and stored into the non-volatile memory, the computer will return to normal mode.

  NOTE: The software time out feature will reset the computer and force it to the normal mode WITHOUT saving any changes made in any of the menus. The changes will only be saved after exiting the SLEEP menu by pressing short SET.

  NOTE: Even in menu mode, the computer always continues to measure and calculate rate and total and control the output so no total will be lost. In some circumstances, such as changing the KFACTOR, the total accumulated may become invalid. The user must take appropriate actions after changing the settings, such as resetting the total or returning it to the previous state.

© 2010 G Instruments – All rights reserved

3.5. Checking the LCD

All the icons of the LCD can be checked by pressing and holding the **RIGHT** button while replacing the battery or after exiting the **SLEEP** menu. Releasing the button will allow the computer to return to normal mode.

NOTE: Removing the battery will clear total B and total C.
Total A is stored in the non-volatile memory every 50 seconds.
Before removing the battery make sure that there was no flow for the last minute.
All important settings are stored in a non-volatile memory and will not be lost.

4. MENU DIAGRAM

The menu diagram for GFC106 flow computer / totalizer is shown below.

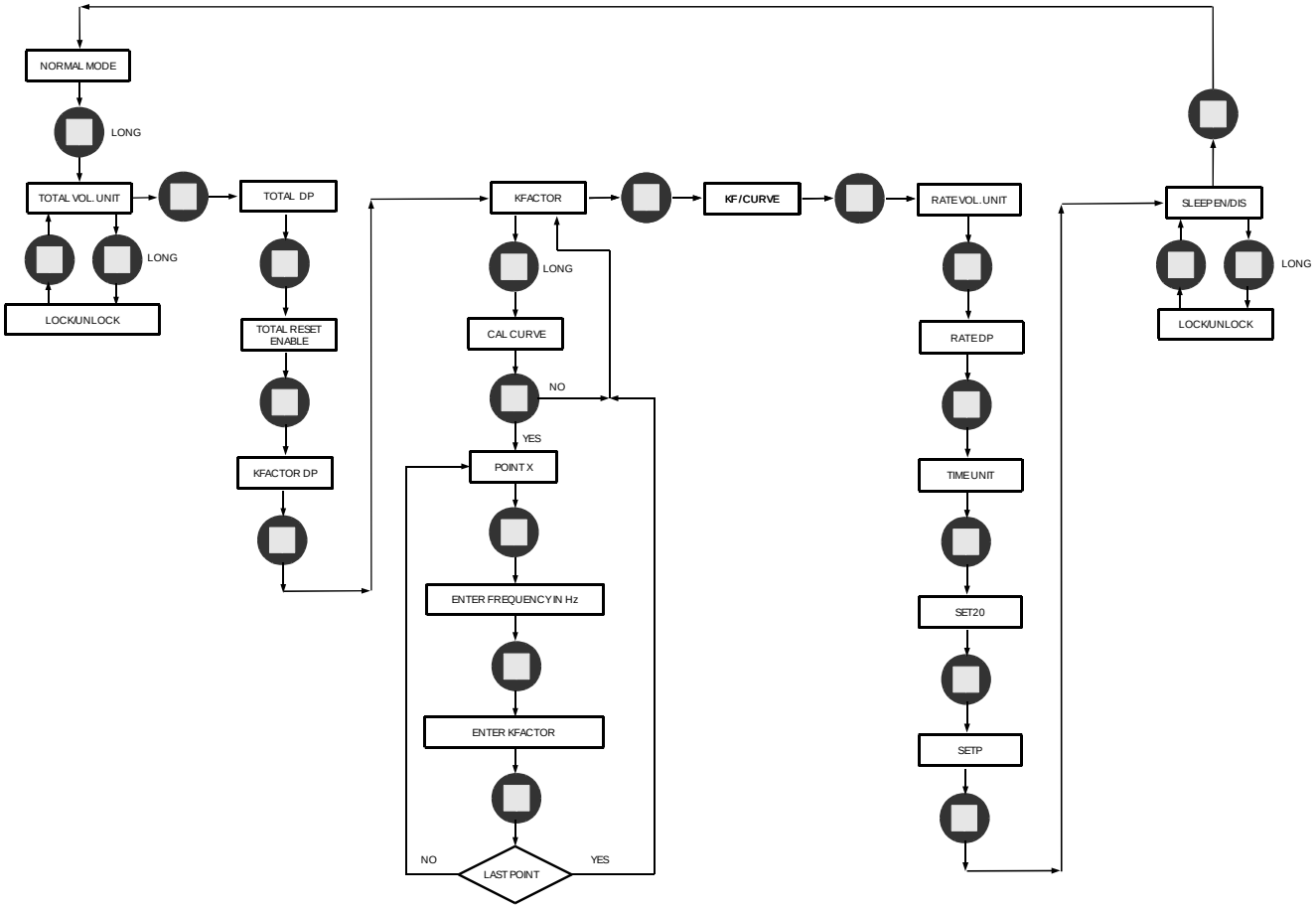

© 2010 G Instruments – All rights reserved

5. APPLICATION

5.1. ELECTRICAL

The wiring diagram is shown below.

NOTE: There is no isolation between any input and the pulse output. Terminals 4 and 7 are shorted inside the device. It is the user's responsibility to consider this fact and implement appropriate wiring in the user's specific application.

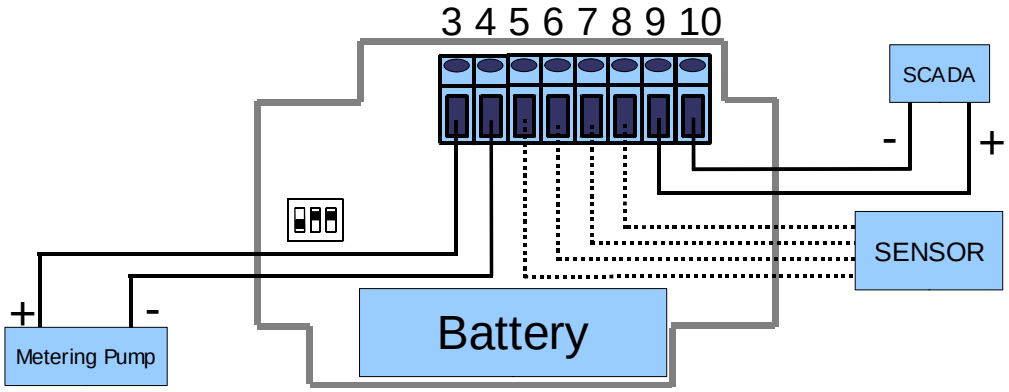

3 – Pulse output plus
4 – Pulse output minus
5 – Power for the sensor, plus
6 – Signal / Coil
7 – Power for the sensor, minus
8 – Coil, only
9 – Analog output, plus
10 – Analog output, minus

In case the device receiving the 4-20 mA is passive the wiring can be done as on the diagram below:

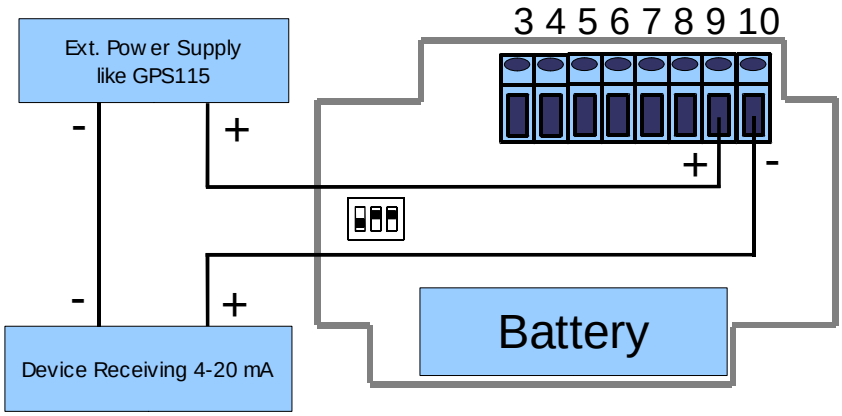

The external power supply i.e. GPS115 provides the power. The three devices have to be connected in series, as on the diagram above.

© 2010 G Instruments – All rights reserved

5.1.1. Wiring the sensor

GFC106 accepts a variety of sensors. See below for wiring specifications.

5.1.1.1. NPN Open Drain, Open Collector

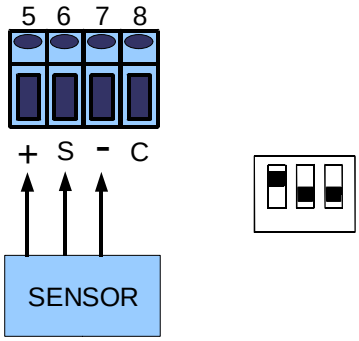

5.1.1.2. PNP Open Drain, Open Collector

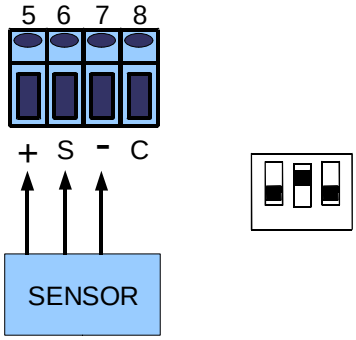

5.1.1.3. Reed Switch, Dry Contact

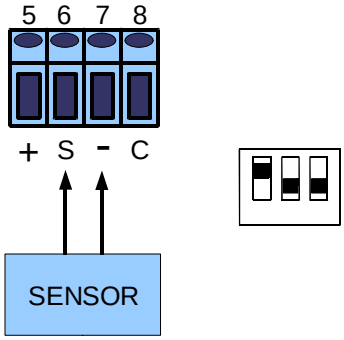

NOTE: A small capacitor in parallel may be needed. Different reed switches and dry contacts have different bouncing time. Test and evaluate carefully to determine the right capacitor.

© 2010 G Instruments – All rights reserved

5.1.1.4. Wave (square, sine, triangle, saw etc.), Logical Signal (CMOS, TTL etc.)

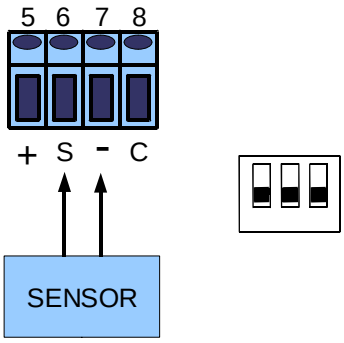

5.1.1.5. Coils

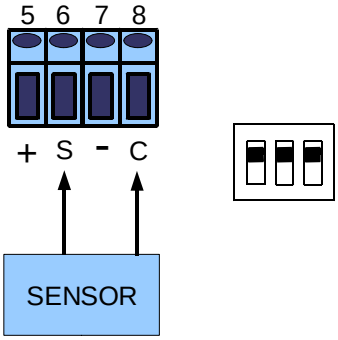

NOTE: If the cable to the coil is shielded, connect the shield to "-" (terminal 7) ONLY. Do not connect the shield to anything at the other (coil) end of the cable. In order to keep the isolation the shield has to be isolated from earth ground and all other equipment or electrical connections.

If the isolation requirements of the application allow, it is recommended terminal 7 ("-") to be connected to a good earth ground, for a better protection and noise reduction.

Carefully evaluate and test the wiring.

© 2010 G Instruments – All rights reserved

5.2. MECHANICAL

Mounting GFC106 on a wall requires an area of 120 x 65 mm (4.73 x 2.56 inches) and only two screws:

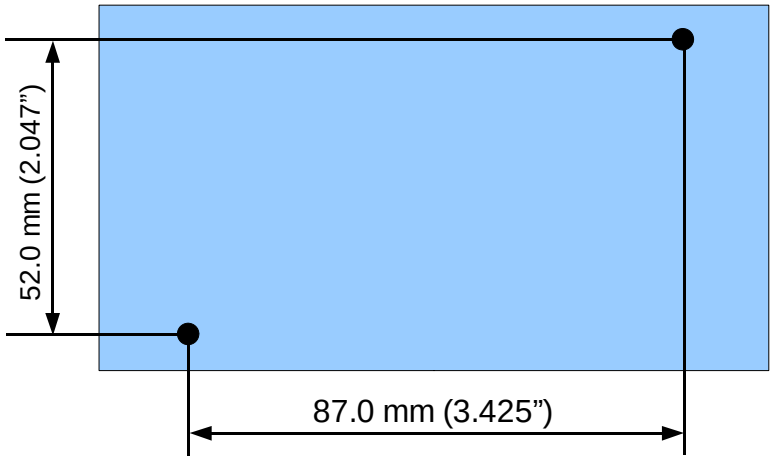

NOTE: The cable grips and the cables need additional space

6. ORDERING

For ordering please use the following G Instruments part numbers:

Description	*G Instruments PN*
GFC106 flow computer with a “AA” size battery	30306
GFC106 flow computer with a “AA” size battery, no cable glands	30308
GFC106 flow computer with a “C” size battery	30307
GFC106 flow computer with a “C” size battery, no cable glands	30309

Replace the AA size battery with G Instruments part number (PN) 30030 only.
Replace the C size battery with G Instruments part number (PN) 30213 only.

If another type of battery has been used, the specifications of the GFC106 flow computer can not be guaranteed and the device can be damaged.

© 2010 G Instruments – All rights reserved

IMPORTANT NOTICE

G Instruments reserves the right to make corrections, modifications, enhancements, improvements and other changes to its products at any time without notice.

Customers should obtain the latest relevant information before placing orders and should verify that such information is current and complete.

G Instruments does not assume any liability arising from the use of any device or circuit described herein, nor does it convey any license under its patent rights or the rights of others.

Customers are responsible for their products and applications using G Instruments devices. To minimize the risks associated with customer products and applications, customers should provide adequate design and operating safeguards.

G Instruments products are not authorized for use as critical components in life support devices or systems without express written approval of G Instruments.

Trademarks and registered trademarks are the property of their respective owners.

© 2010 G Instruments – All rights reserved